FKP Indústria de Plásticos LTDA

Rua Norbal João da Rocha, 360. Rio Maina, Criciúma, SC
(48) 3442-0003

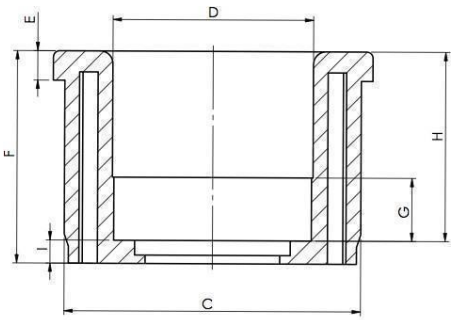

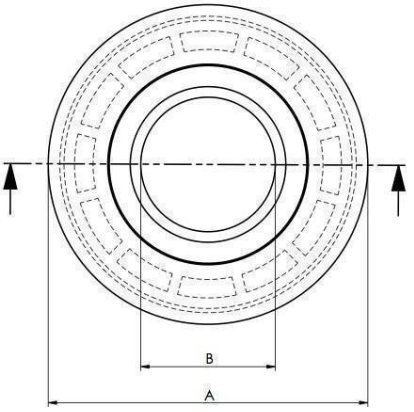

FKP Indústria de Plásticos LTDA

Rua Norbal João da Rocha, 360. Rio Maina, Criciúma, SC

(48) 3442-0003

Mancal (mm)

Cód	Descrição	A	B	C	D	E	F	G	H	I
604	2″ x 35 x 26 # 2,65	50	19	46	35	8,0	26	9,0	21	5,0
979	2″ x 35 x 26 # 3,00	50	19	45	35	8,0	26	9,0	23	5,0
1015	$2^{1/2}$″ x 35 x 26 # 2,65	63	18	58,5	35	8,0	26	10	21	5,0
1016	$2^{1/2}$″ x 47 x 39 # 2,65	63	22	58,5	47	7,5	39	13	34	5,0
1140	3″ x 35 x 30 # 1,55	76	20	73	35	7,0	30	11	22	3,0
495	3″ x 35 x 30 # 2,00	76	20	72	35	7,0	30	11	22	3,0
1471	3″ x 35 x 30 # 2,65	76	20	71	35	7,0	30	11	22	3,0
1675	3″ x 35 x 40 # 2,65	77	20	71	35	7,5	40	11	34	6,0
1470	3″ x 47 x 38 # 2,65	76	23	71	47	7,5	38	14	33	5,0
371	3″ x 47 x 38 # 3,00	76	23	70	47	8,0	38	11	33	5,0
1662	3″ x 47 x 38 # 2,00	76	23	72	47	8,0	38	11	33	5,0
1571	3″ x 47 x 50 # 2,65	76	32	71	47	7,0	50	15	44	6,0

FKP Indústria de Plásticos LTDA

Rua Norbal João da Rocha, 360. Rio Maina, Criciúma, SC

(48) 3442-0003

Cód	Descrição	A	B	C	D	E	F	G	H	I
514	3″ x 47 x 50 # 3,00	76	32	70	47	7,0	50	15	44	6,0
494	$3^{1/2}$″ x 47 x 39 # 3,00	88	23	83	47	8,0	39	14	34	5,0
1504	$3^{1/2}$″ x 47 x 39 # 2,65	88	23	84	47	8,0	39	14	34	5,0
1139	4″ x 47 x 43,5 # 1,95	101	22	98	47	8,0	43,5	14	39	4,5
1480	4″ x 47 x 43,5 # 2,3	101	22	97,5	47	8,0	43,5	14	39	4,5
918	4″ x 47 x 43,5 # 2,65	101	22	97	47	8,0	43,5	14	39	4,5
493	4″ x 47 x 43,5 # 3,00	101	32	96	47	8,5	43,5	14	39	4,5
751	4″ x 47 x 51 # 3,00	101	32	96	47	8,5	51	15	44	7,0
1676	4″ x 47 51 # 2,65	101	32	97	47	8,5	51	15	44	7,0
758	4″ x 52 x 51 # 3,00	101	32	96	52	8,5	51	15	44	7,0
700	$4^{1/2}$″ x 47 x 43 # 3,00	114	26	109	47	8,0	43	13	38	5,0
1340	110 x 47 x 51	110	32	96	47	8,5	51	15	44	7,0
1341	110 x 52 x 51	110	32	96	52	8,5	51	15	44	7,0

FKP Indústria de Plásticos LTDA

Rua Norbal João da Rocha, 360. Rio Maina, Criciúma, SC

(48) 3442-0003

Cód	Descrição	A	B	C	D	E	F	G	H	I
1387	125 x 47 x 51	125	32	113	47	8,5	51	15	44	7,0
826	125 x 52 x 51	125	32	113	52	8,5	51	15	44	7,0
844	5” x 47 x 51 # 3,75	125	32	120	47	8,5	51	15	44	7,0
271	5” x 52 x 51 # 3,75	125	32	120	52	8,5	51	15	44	7,0
1447	5” x 62 x 53 # 3,75	126	41	120	62	8,5	52	15	47	5,0
1000	6” ½ x 90 x 55 # 4,25	165	84	157	90	10,0	54	24	43	9,0
1213	6” x 47 x 55 # 3,75	150	42	145	47	8,0	55	16	47	8,0
1214	6” x 52 x 55 # 3,75	150	42	145	52	8,0	55	16	47	8,0
930	6” x 62 x 55 # 3,75	150	42	145	62	8,0	55	16	47	8,0
2037	4” x 62 x 51 # 3,00	101	40	96	62	8,5	51	18	45	7,0

FKP Indústria de Plásticos LTDA

Rua Norbal João da Rocha, 360. Rio Maina, Criciúma, SC
(48) 3442-0003

Mancal Sem Aba (mm)

Cód	Descrição	A	B	C	D	E	F	G	H	I
2022	96″ x 47 x 51	_	32	96	47	_	51	13	45	7,0
1753	96″ x 52 x 51	_	32	96	52	_	51	13	45	7,0
2036	96″ x 62 x 51	_	40	96	62	_	51	18	46	7,0
1752	113″ x 52 x 51	_	32	113	52	_	51	13	45	7,0
1754	120″ x 62 x 53	_	42	120	62	_	53	16	47	7,0